Technical Data

Specification & Capacities

SPX532

CE

EN 13000

15.03.2021 | Rev.6

[m] [kg]

OVERALL DIMENSIONS

SPX532CDH
JIB STOWED

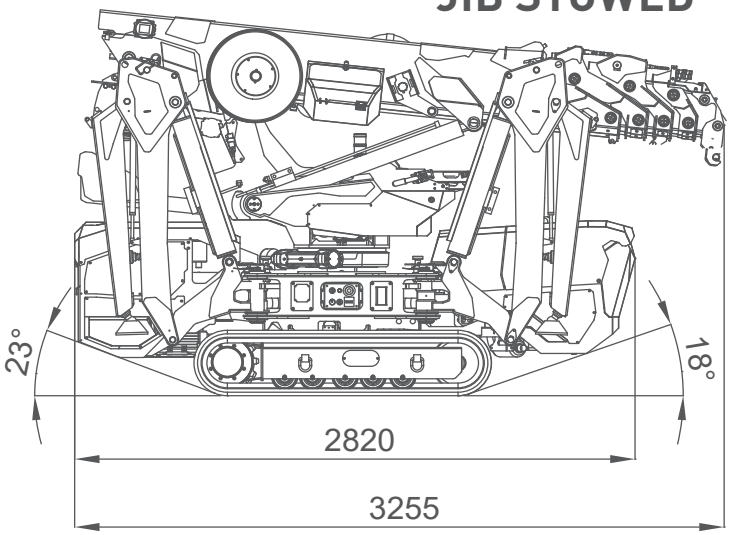

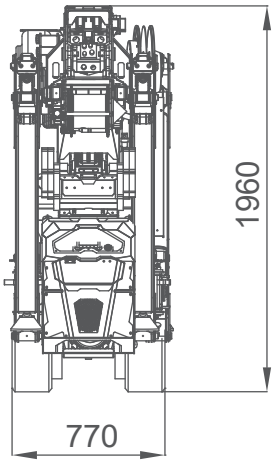

JIB MOUNTED

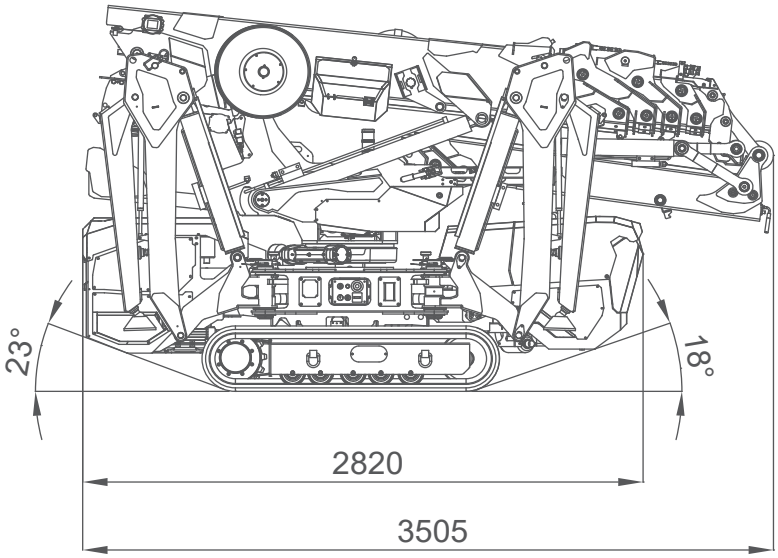

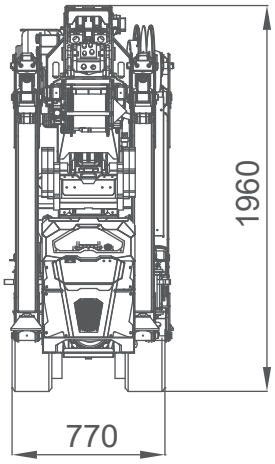

EXTENDED TRACKS

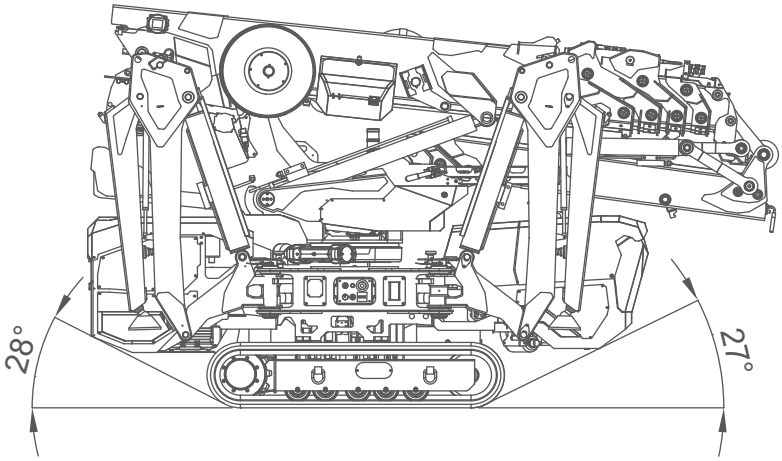

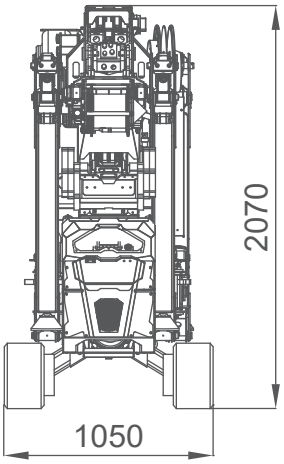

OVERALL DIMENSIONS

SQUARE OUTRIGGER 1ST POSITION STABILITY

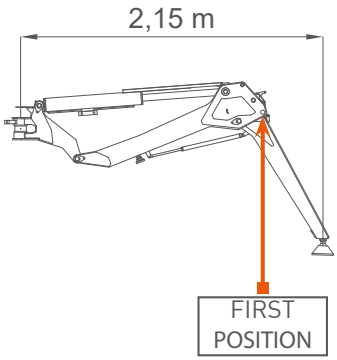

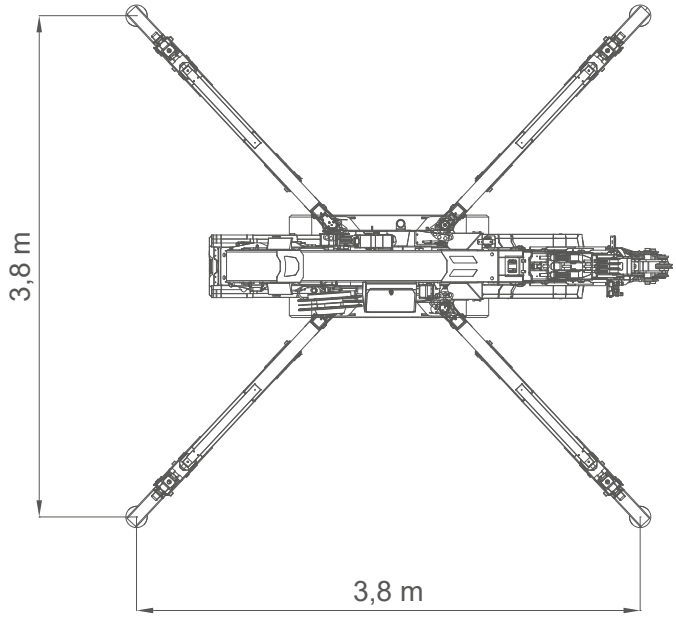

OUTRIGGER 2ND POSITION FULL STABILITY

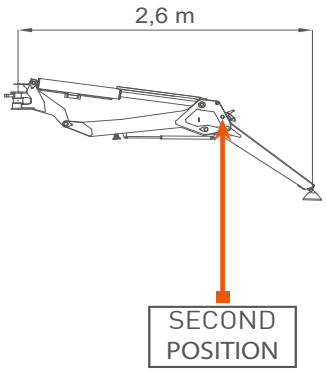

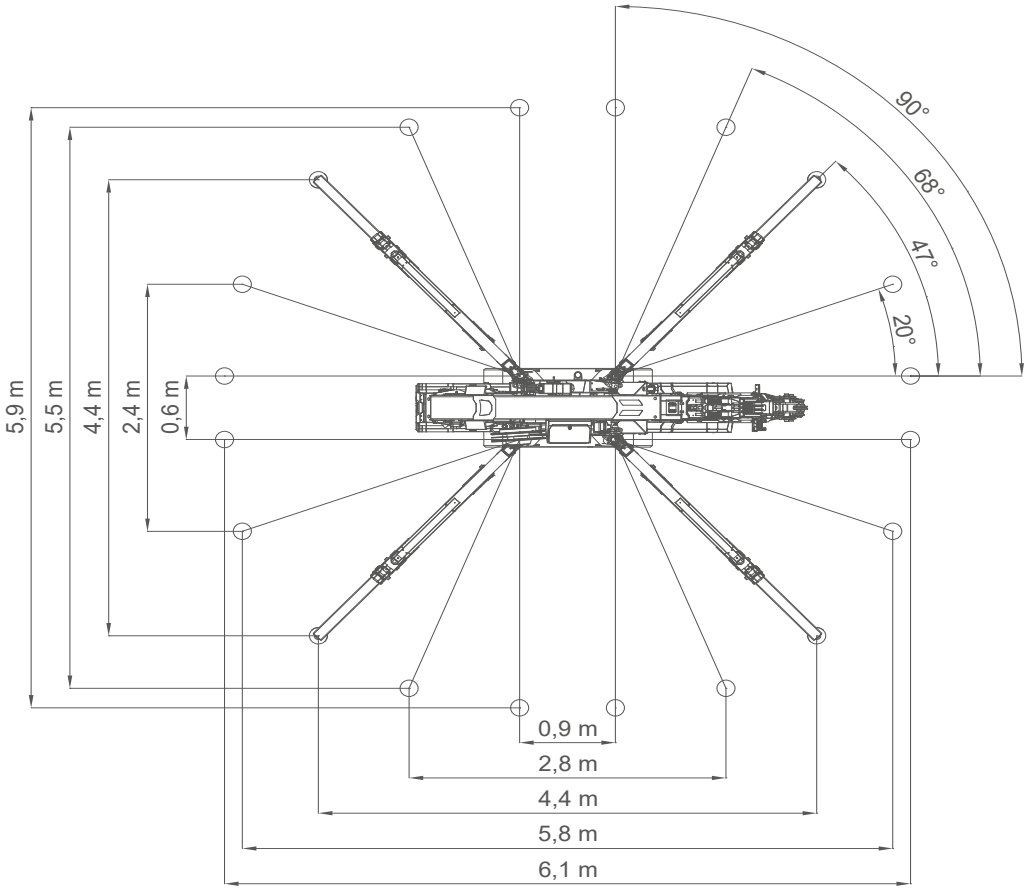

OVERALL INFORMATION

		Name/ version	kg*
WEIGHTS	Crane	CDH, CL, CL2	2520
	Winch	W800.6	52
	Hookblock	SINGLE FALL	20
		MULTIPLE FALL	49
	Power Pack (AUX)	1-PHASE POWERPACK	52
		3-PHASE POWERPACK	63
	Jib	JIB1200GX	50
		JIB1000.2H1MX	210
		MANUAL EXTENSION	14
		PULLEY HEAD	8
	Outriggers mats	OM400	17

ENGINE	Engine	KUBOTA D902-E4B	
	kW Power	16,1kW 22HP	
	Fuel	DIESEL	
	Tank	L	10
ELECTRIC	Lithium Battery	CL: 24V 300Ah	
	kW Power	24V-3F 5,5kW 7,5HP	
	Lithium Battery	CL2: 48V 200Ah	
	kW Power	48V-3F 7,0kW 9,5HP	
HYDRAULIC	Hydraulic Oil	ISO 6743-4:HFDU with VG46 viscosity class	
		Working temp	<70°C
		L	40
MOVEMENTS	Travel Speed	km/h	CDH: 2,7 CL, CL2 : 1,8
	Gradeability	20° (36%)†	
	Track Load	kg/cm²	0,63
	Outrigger Load (MAX)	kg	3000‡
	Working Angle	0°/80°	
		s	30
	Slewing	360°	
		rpm	0,85
	Boom Telescoping	m	2,5 - 10,8
		s	40

*: Dry weight
†: Engine working limit
‡: Static lifting

HOIST PERFORMANCE

GEAR WINCH	**Layer**	**Max line pull**	**Standard rope speed**	**Highest rope speed**
		kg	m/min	m/min
	1	785		25
	2	730		27
	3	680		29
	4	640		31
	5	600		33
ROPE	**Wire rope**	**Ø**	**Total length**	**Max load**
		mm	m	kg
	19x7 right lang lay Non rotating	7	81	5700
PISTON WINCH	**Layer**	**Max line pull**	**Standard rope speed**	**Highest rope speed**
		kg	m/min	m/min
	1	980*		16
	2	910*		17
	3	860*		19
	4	810*		20
ROPE	**Wire rope**	**Ø**	**Total length**	**Max load**
		mm	m	kg
	19x7 right lang lay Non rotating	7	68	5700
HOOK BLOCK	**Load**	**N° of**		**Block type**
	kg	Sheaves	Lines	
	3200	2	4	Multiple fall block
	2400	1	3	
	1600	1	2	
	800	-	1	Single fall block

*: LMI limited at 800 kg

PULLEY HEAD AND HOOKBLOCK

TILTING PULLEY HEAD

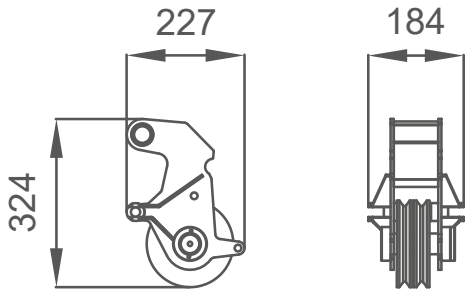

SINGLE FALL

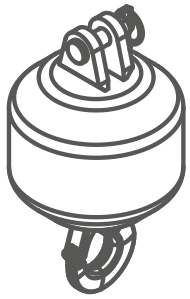

MULTIPLE FALLS

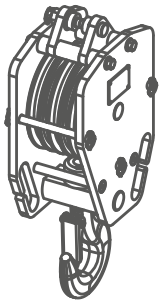

CRANE PERFORMANCE

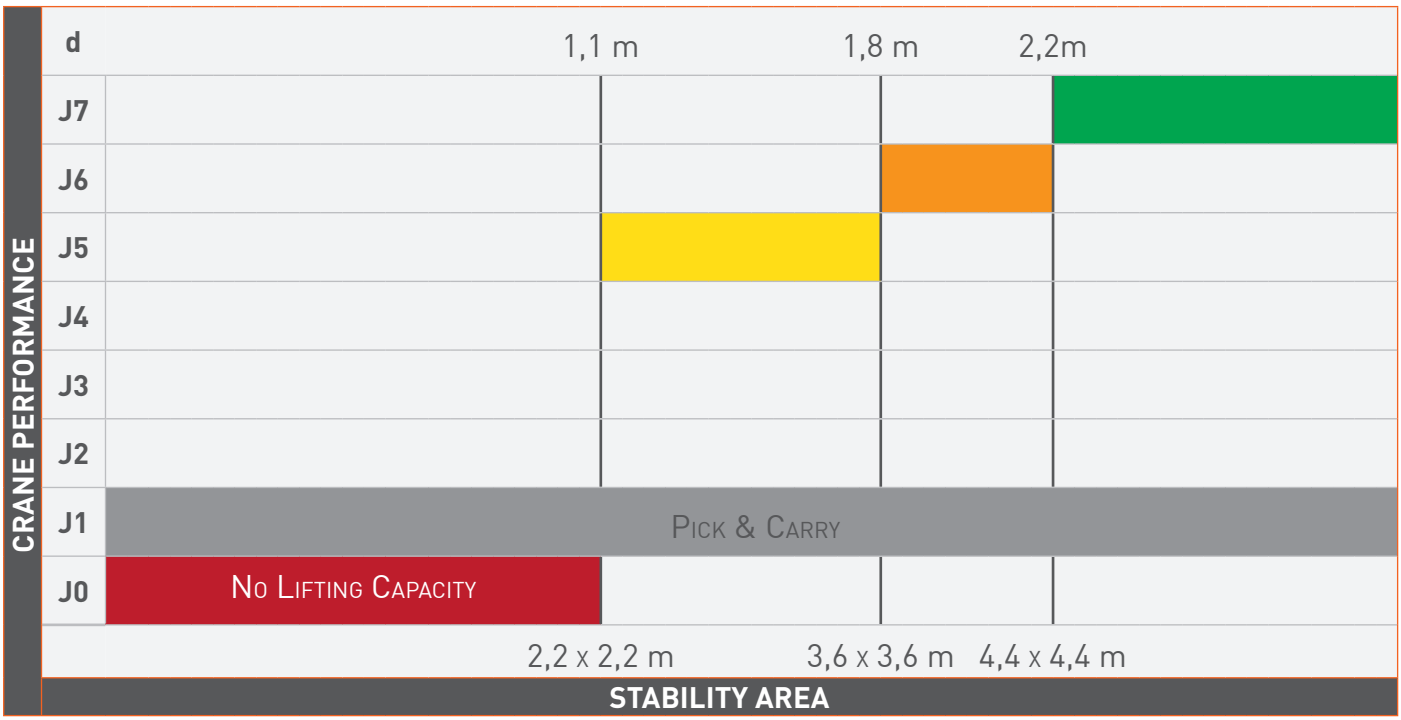

STABILITY EXAMPLES

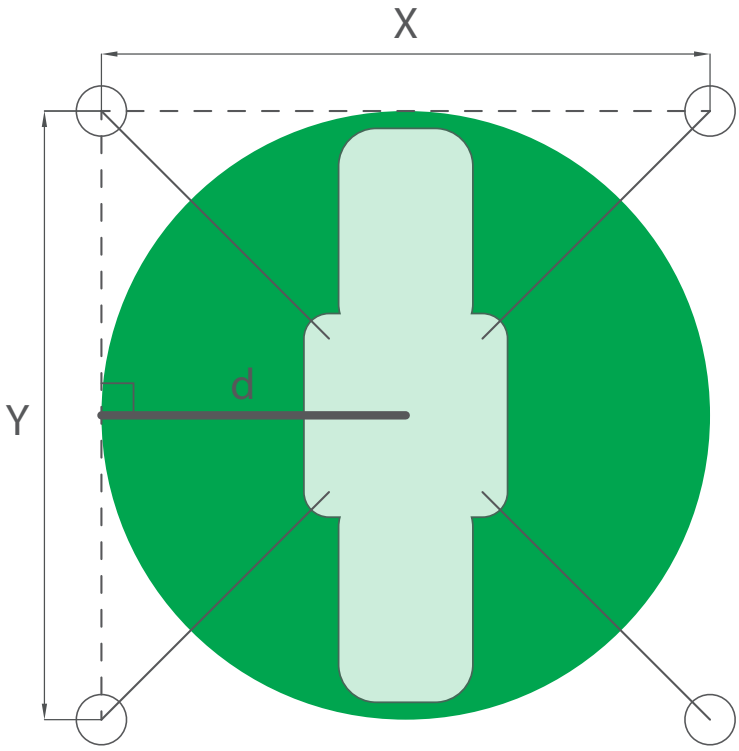

Example 1:
Square stability area.

X = 4,4 m
Y = 4,4 m
d = 2,2 m

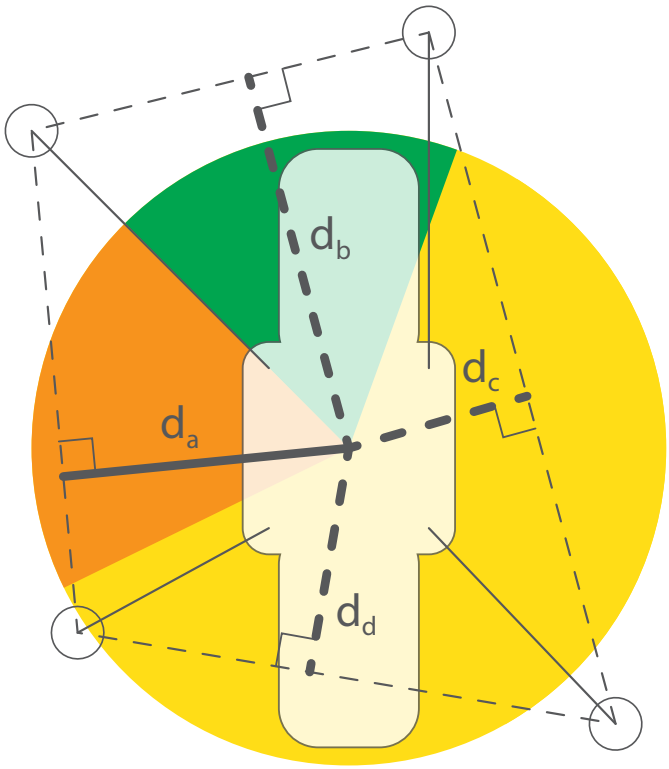

Example 2:
Asymmetric stability area.

d_a = 1,9 m
d_b = 2,2 m
d_c = 1,3 m
d_d = 1,3 m

Example 3:
Close outriggers stability area.

X = 0,6 m
Y = 5,0 m
d_a = 0,3 m
d_b = 2,5 m
d_c = 0,3 m
d_d = 2,5 m

d_b and d_d should be J7 geometrically but is limited to J0 anyway because too narrow.

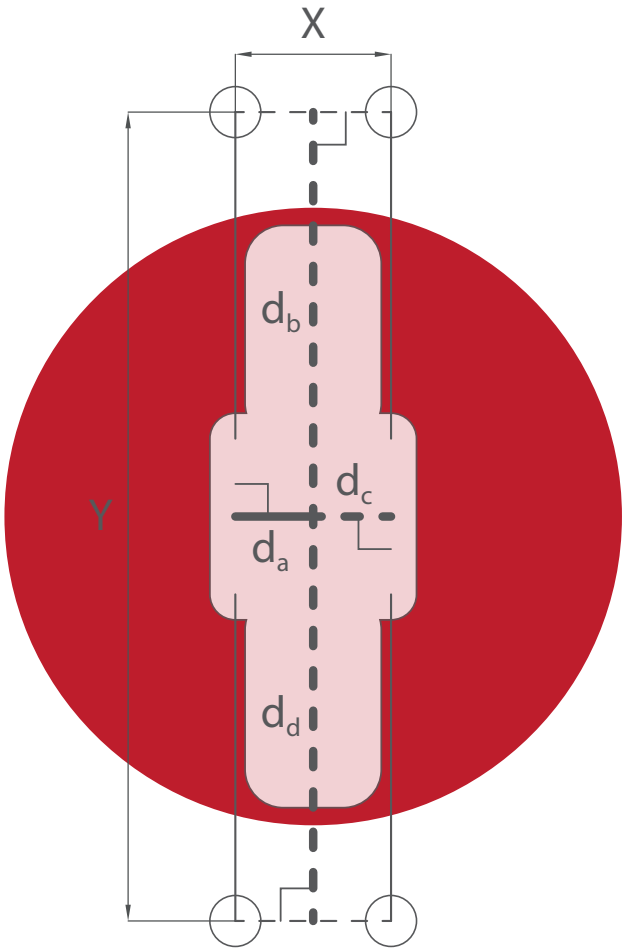

SPX532 - MAIN BOOM

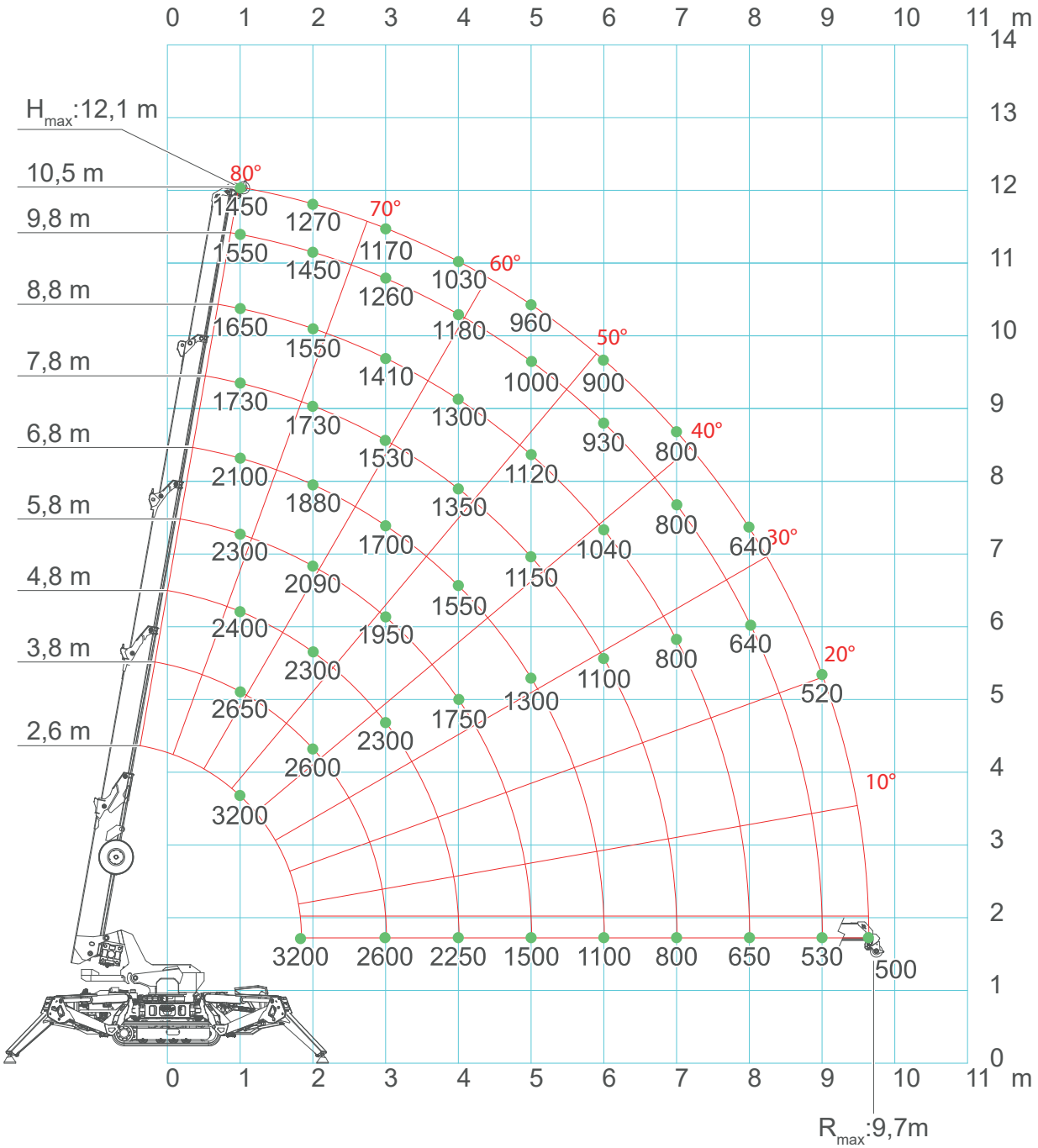

SPX532 - MAIN BOOM

CRANE PERFORMANCE: J7										
L →	2,6	2,8	3,8	4,8	5,8	6,8	7,8	8,8	9,8	10,3
1	3,20	3,00	2,65	2,40	2,30	2,10	1,73	1,65	1,55	1,45
2	3,20	3,20	2,60	2,30	2,09	1,88	1,73	1,55	1,45	1,27
3			2,60	2,30	1,95	1,70	1,53	1,41	1,26	1,17
4				2,25	1,75	1,55	1,35	1,30	1,18	1,03
5					1,50	1,30	1,15	1,12	1,00	0,96
6						1,10	1,10	1,04	0,93	0,90
7							0,80	0,80	0,80	0,80
8								0,65	0,64	0,64
9									0,53	0,52
9,45*										0,50
↑R	[ton]									

LC532_V100_0719_BP_GANCIO_J7

CRANE PERFORMANCE: J6										
L →	2,6	2,8	3,8	4,8	5,8	6,8	7,8	8,8	9,8	10,3
1	3,20	3,00	2,65	2,40	2,30	2,10	1,73	1,65	1,55	1,45
2	3,20	3,20	2,60	2,30	2,09	1,88	1,73	1,55	1,45	1,27
3			2,60	2,30	1,95	1,70	1,53	1,41	1,26	1,17
4				1,70	1,65	1,50	1,35	1,30	1,18	1,03
5					1,10	1,10	1,10	1,00	1,00	0,96
6						0,80	0,80	0,80	0,80	0,80
7							0,60	0,60	0,60	0,60
8								0,48	0,48	0,48
9									0,40	0,40
9,45*										0,36
↑R	[ton]									

LC532_V100_0719_BP_GANCIO_J6

*: Refers to hook configuration. Pulley configuration is 0,1m longer.

SPX532 - MAIN BOOM

CRANE PERFORMANCE: J5

L →	2,6	2,8	3,8	4,8	5,8
1	1,50	1,50	1,00	0,70	0,40
2	1,20	1,20	0,70	0,50	0,40
3			0,60	0,45	0,30
4				0,35	0,28
5					0,20
↑R	[ton]				

LC532_V100_0719_BP_GANCIO_J5

CRANE PERFORMANCE: J1

L →	2,6	2,8
1	0,40	0,40
2		0,11
↑R	[ton]	

LC532_V100_0719_BP_GANCIO_J1

*: Refers to hook configuration. Pulley configuration is 0,1m longer.

SPX532 - JIB1000.2H1MX

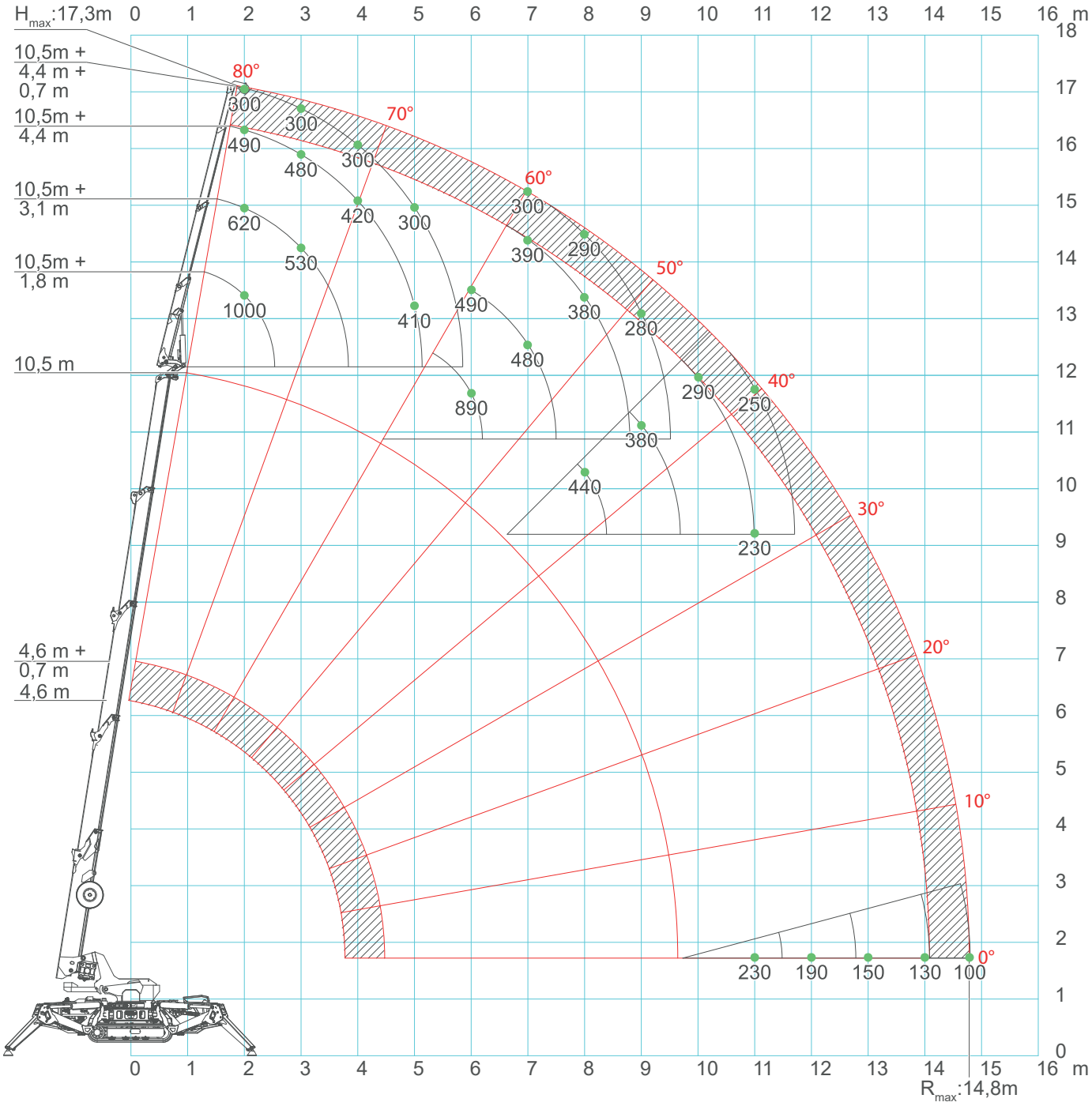

*: With manual extension on maximum weight is limited to 300kg.

SPX532 - JIB1000.2H1MX

CRANE PERFORMANCE: J7				
L_J →	1,9	3,1	4,4	5,1
2	1,00	0,62	0,49	0,30
3	1,00	0,53	0,48	0,30
4	1,00	0,51	0,42	0,30
5	1,00	0,5	0,41	0,30
6	0,89	0,49	0,40	0,30
7	0,67	0,48	0,39	0,30
8	0,44	0,40	0,38	0,29
9	0,38	0,38	0,34	0,28
10	0,29	0,29	0,29	0,25
11	0,23	0,23	0,23	0,23
12		0,19	0,19	0,19
13			0,15	0,15
14			0,14	0,13
14,8				0,10
↑R	[ton]			

LC532_V100_0719_JIB1000_GANCIO_J7

CRANE PERFORMANCE: J6				
L_J →	1,9	3,1	4,4	5,1
2	1,00	0,54	0,45	0,30
3	1,00	0,50	0,43	0,30
4	1,00	0,48	0,36	0,30
5	0,80	0,43	0,33	0,29
6	0,59	0,40	0,30	0,28
7	0,42	0,38	0,29	0,27
8	0,30	0,30	0,28	0,26
9	0,20	0,20	0,20	0,20
10	0,14	0,14	0,14	0,14
11	0,11	0,11	0,11	0,11
11,2	0,11	0,11	0,11	0,11
↑R	[ton]			

LC532_V100_0719_JIB1000_GANCIO_J6

*: With manual extension on maximum weight is limited to 300kg.

SPX532 - JIB1000.2H1MX

CRANE PERFORMANCE: J5

L_J →	1,9	3,1	4,4	5,1
2	0,80	0,42	0,25	0,21
3	0,70	0,40	0,24	0,20
4	0,40	0,30	0,23	0,19
5	0,28	0,24	0,22	0,18
↑R	[ton]			

LC532_V100_0719_JIB1000_GANCIO_J5

CRANE PERFORMANCE: J1

L_J →	1,9
2	0,10
3	0,10
4	0,10
↑R	[ton]

LC532_V100_0719_JIB1000_GANCIO_J1

*: With manual extension on maximum weight is limited to 300kg.

SPX532 - JIB1200GX

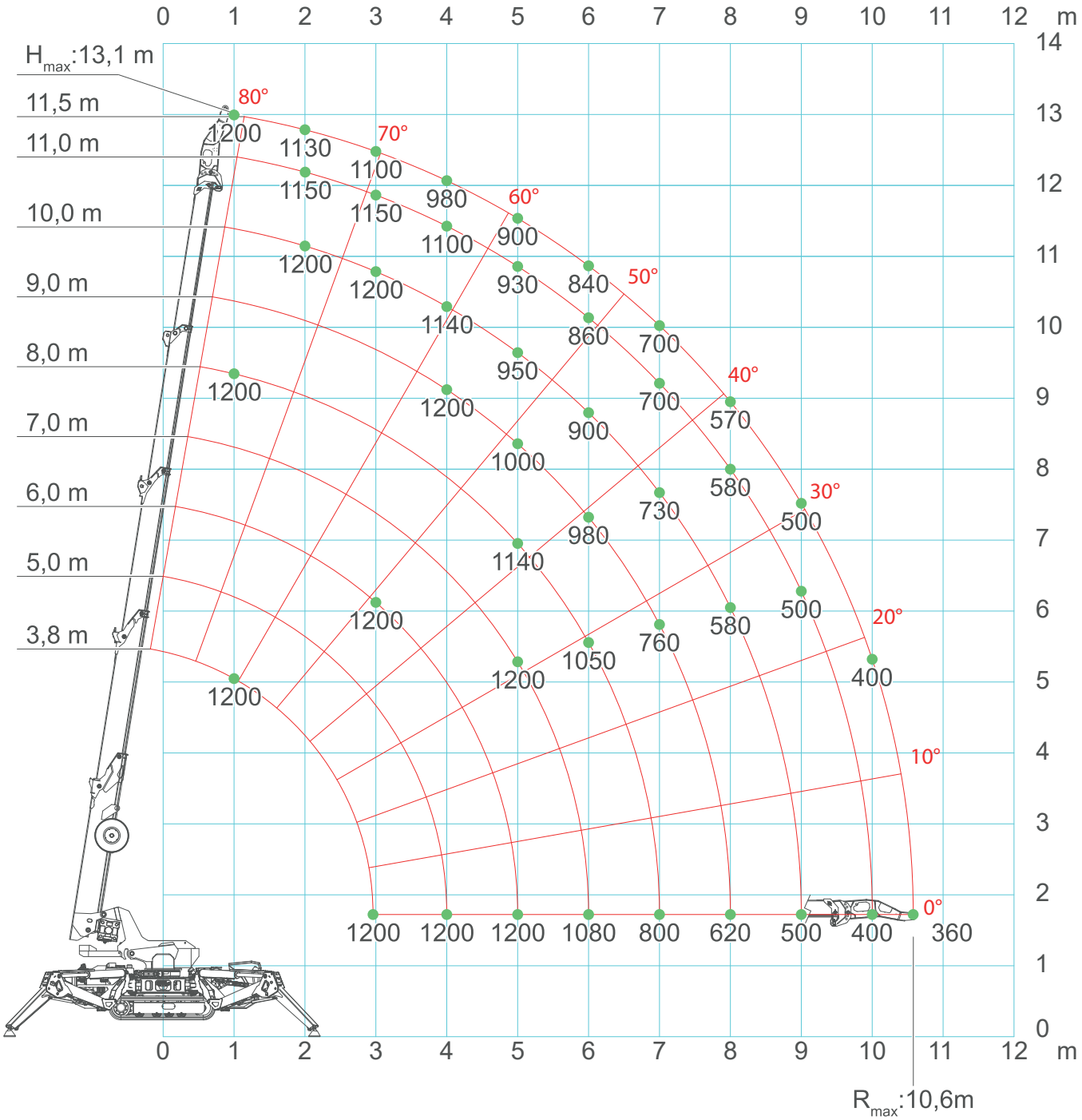

SPX532 - JIB1200GX

CRANE PERFORMANCE: J7									
L →	2,8	4,0	5,0	6,0	7,0	8,0	9,0	10,0	10,5
$L+L_J$ →	3,8	5,0	6,0	7,0	8,0	9,0	10,0	11,0	11,5
1	1,20	1,20	1,20	1,20	1,20	1,20	1,20	1,20	1,20
2	1,20	1,20	1,20	1,20	1,20	1,20	1,20	1,15	1,13
3	1,20	1,20	1,20	1,20	1,20	1,20	1,20	1,15	1,10
4		1,20	1,20	1,20	1,20	1,20	1,14	1,10	0,98
5			1,20	1,20	1,14	1,00	0,95	0,93	0,90
6				1,08	1,05	0,98	0,90	0,86	0,84
7					0,80	0,76	0,73	0,70	0,70
8						0,62	0,58	0,58	0,57
9							0,50	0,50	0,50
10								0,40	0,40
10,6									0,36
↑R	[ton]								

LC532_V100_1119_JIB1200GX_GANCIO_J7

CRANE PERFORMANCE: J6									
L →	2,8	4,0	5,0	6,0	7,0	8,0	9,0	10,0	10,5
$L+L_J$ →	3,8	5,0	6,0	7,0	8,0	9,0	10,0	11,0	11,5
1	1,20	1,20	1,20	1,20	1,20	1,20	1,20	1,20	1,20
2	1,20	1,20	1,20	1,20	1,20	1,20	1,20	1,15	1,13
3	1,20	1,20	1,20	1,20	1,20	1,20	1,20	1,15	1,00
4		1,20	1,20	1,20	1,20	1,20	1,14	1,10	0,98
5			1,08	1,00	0,96	0,95	0,93	0,92	0,90
6				0,78	0,75	0,71	0,68	0,62	0,60
7					0,58	0,56	0,54	0,50	0,48
8						0,47	0,44	0,42	0,40
9							0,36	0,35	0,32
10								0,29	0,28
10,6									0,25
↑R	[ton]								

LC532_V100_1119_JIB1200GX_GANCIO_J6

SPX532 - JIB1200GX

CRANE PERFORMANCE: J5

L →	2,8	4,0	5,0
$L+L_J$ →	3,8	5,0	6,0
1	1,20	0,70	0,40
2	1,11	0,42	0,36
3	0,54	0,42	0,26
4		0,28	0,22
5			0,15
↑R	[ton]		

LC532_V100_1119_JIB1200GX_GANCIO_J5

ACCESSORIES
SPX532CDH

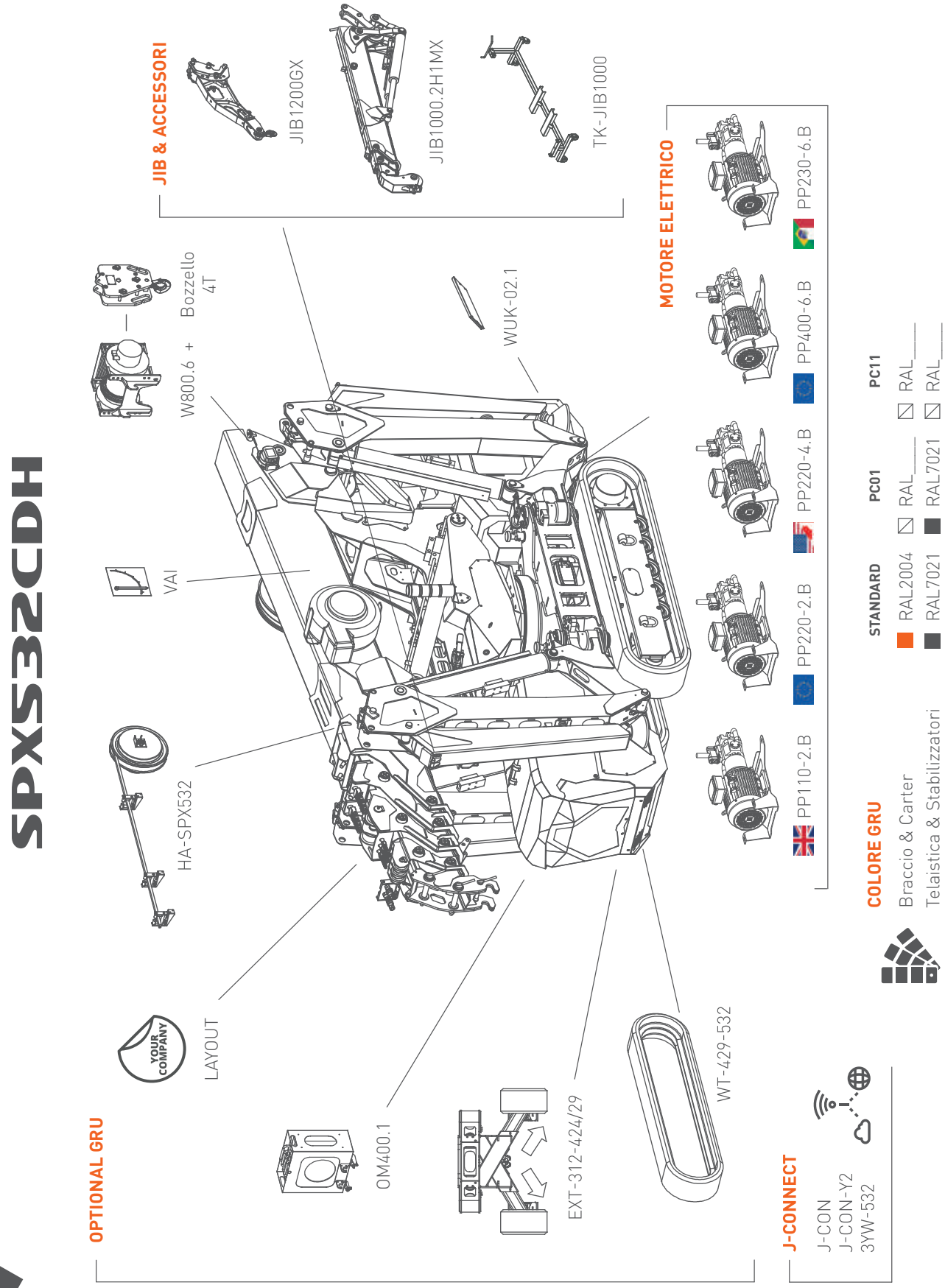

SPX532CL

OPTIONAL GRU

LAYOUT

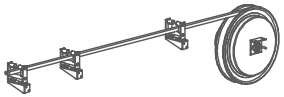

HA-SPX532

VAI

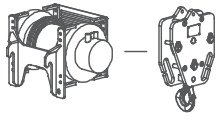

W800.6 + Bozzello 4T

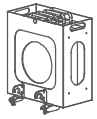

OM400.1

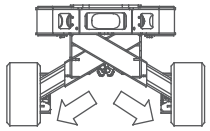

EXT-312-424/29

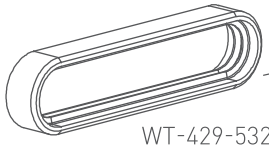

WT-429-532

WUK-02.1

JIB & ACCESSORI

JIB1200GX

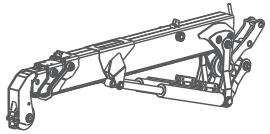

JIB1000.2H1MX

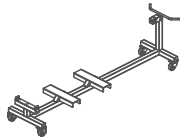

TK-JIB1000

CARICABATTERIE

BC3-220V60A BC3-110V60A

J-CONNECT

J-CON
J-CON-Y2
3YW-532

COLORE GRU

Braccio & Carter
Telaistica & Stabilizzatori

STANDARD	PC01	PC11
RAL2004	RAL____	RAL____
RAL7021	RAL7021	RAL____

ACCESSORIES FEATURES
JIB1000.2H1MX

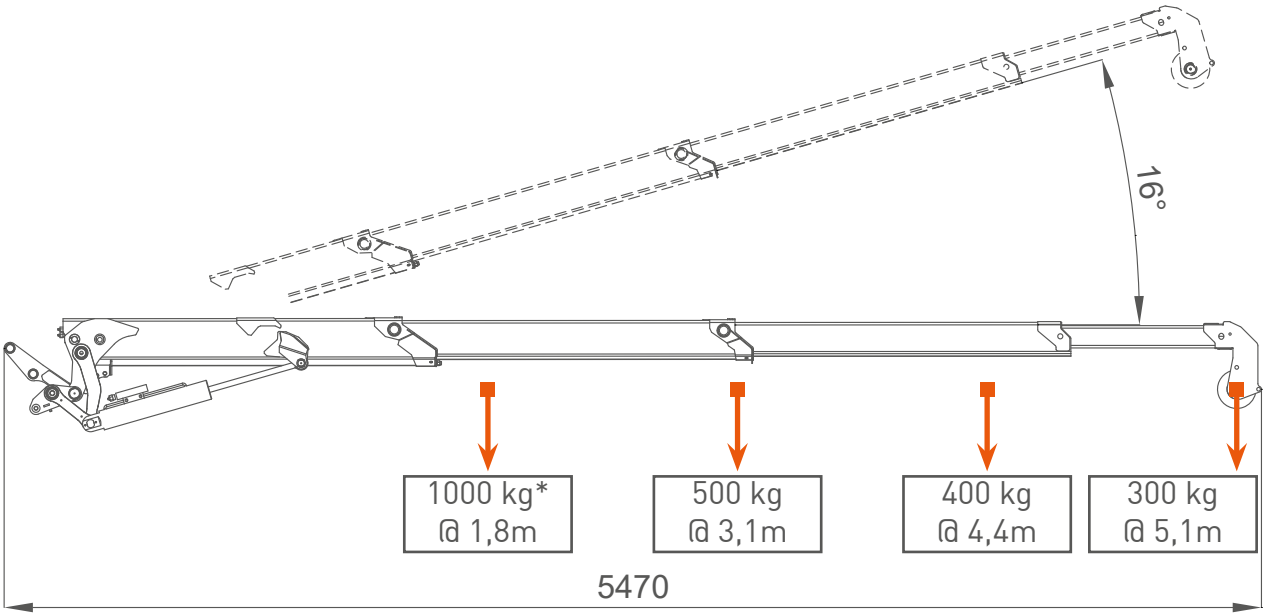

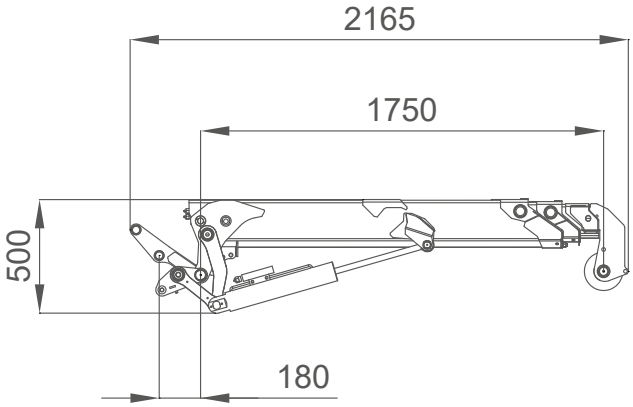

*: Maximum capacity using hook, with winch this is limited to single fall winch capacity (800 kg).

JIB1200GX

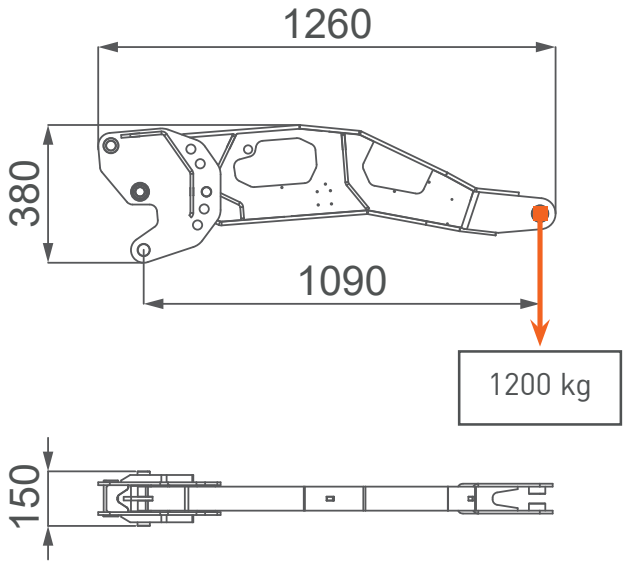

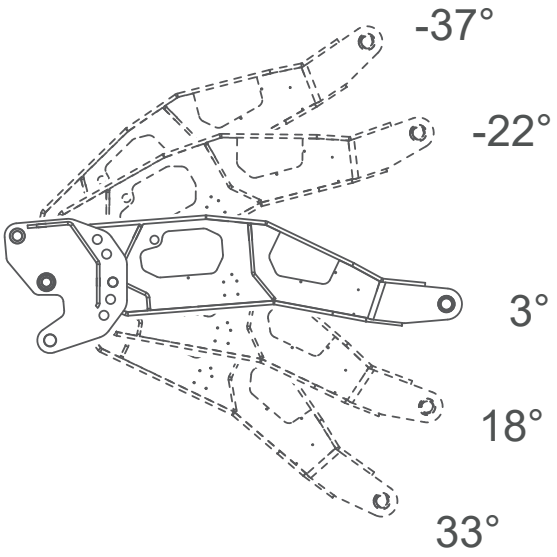

SYMBOLS

Weight	Engine	Boom Angle	Minipicker
Counterweight	Diesel Fuel	Boom Lenght	Back Wheel Loading Point
Crane	Petrol Fuel	Boom Radius	Front Wheel Loading Point
Dimensions	Tank	Jib on Board	Working Radius
Stabilization Area	Power	Without Jib on Board	Stabilizing Bar
Travel Speed	Battery	Jib Hook Radius	Standard
Gradeability	Lithium Battery	Jib Lenght and Angle	Factory max. load
Outrigger Load	Powerpack	Jib Lenght	Building site max. load
Track Loading	Main Winch	Jib Radius	Maximum inclination of the machinery
Outtriggers Setup	Hookblock	Manipulator Lenght	Hydraulic oil
Ext Tracks Width	Slewing	Manipulator Radius	Winter Warm-up Kit
Chart on Tracks	Slewing Locked	Number of vacuum pads	Horizontal Boom Angle
Slope	Outriggers mats	Grabber	White Pads for Steel Tracks

REMARKS REFERRING TO LOAD CHART

- The load charts are calculated according to EN 13000.
- For the calculation of the load charts at least a wind speed of 9m/s (33km/h) and regarding the load a sail area of 1m² per ton load and a wind resistance coefficient of 1.2 on the load have been taken into account. For lifting of loads with large sail areas and/or high wind resistance coefficients the maximum wind speed as stated in the load charts has to be reduced.
- Lifting capacities are given in kilograms.
- The weight of the hook blocks and hooks is part of the load and therefore it must be deducted from the lifting capacities.
- Working radii are mesured from the slewing centre.
- The lifting capacities given for the telescopic boom apply if the folding jib is removed.
- Subject to modification of lifting capacities.

YOUR JEKKO DEALER

EN All specifications and features herein described can be changed without prior advice. All indicated data are indicative only and are not binding as crane performs differently depending on its use. **IT** Tutte le caratteristiche e le specifiche descritte possono essere soggette a variazioni senza preavviso. Tutti i dati riportati sono forniti a puro titolo informativo e non sono impegnativi dal momento che le prestazioni della macchina variano in funzione dell'utilizzo. **DE** Unangekündikte Änderungen sämtlicher Eigenschaften und Daten sind möglich. Alle Angaben sind Richtwerte und nicht verbindlich da die Leistungen der Vorrichtung von deren Einsatz abhägen. **ES** Todas las caracterìsticas y las especificaciones aquì indicadas pueden ser sujetas a variaciones sin aviso. Se dan todos los datos aquì indicados como simples informaciones. No se consideran como vinculantes, dado que las prestaciones del maquinario pueden variar. **FR** Toutes les caractéristiques et le spécifications descriptives peut être sujet à variation sans préavis. Tout les données rapportés sont fourni à titre informatif et ne sont pas engager au moment que la prestation de la machine change en function de l'emploi.

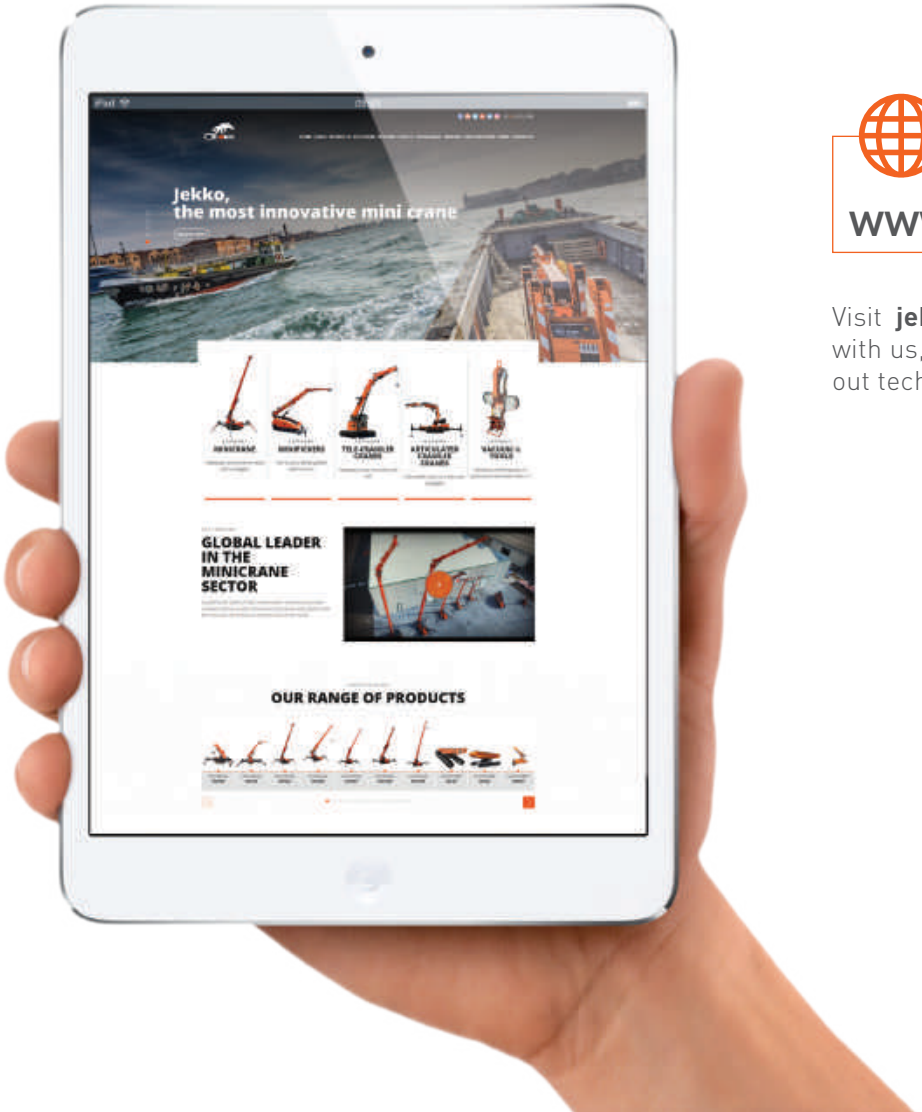

www.jekko-cranes.com

Visit **jekko-cranes.com** to keep in contact with us, discover all the latest news and find out technical details of all our products.

15.03.2021 | Rev.6

SERIAL NUMBER:

Jekko s.r.l.
Via Campardone, 1 - 31014 Colle Umberto (TV) - Italy
info@jekko.it - www.jekko-cranes.com